hep-ph/0407076
July 6, 2004

arXiv:hep-ph/0407076v1 7 Jul 2004

Right-handed currents, CP violation, and $B \to VV$

Alexander L. Kagan

Department of Physics
University of Cincinnati
Cincinnati, Ohio 45221, U.S.A.

Abstract

Precision CP violation measurements in rare hadronic B decays could provide clean signatures of parity symmetric new physics, implying the existence of $SU(2)_L \times SU(2)_R \times U(1)_{B-L} \times P$ symmetry at high energies. New contributions to the weak scale Hamiltonian which respect parity to $O(1\%)$ in supersymmetric realizations are compatible with an $SU(2)_R$ breaking scale $M_R \leq M_{\rm GUT}$, implying that sensitivity to the GUT scale is possible. The generic case of right-handed currents without left-right symmetry is also discussed. A detailed analysis of $B \to VV$ polarization in QCD factorization reveals that the low longitudinal polarization fraction $f_L(\phi K^*) \approx 50\%$ can be accounted for in the SM via a QCD penguin annihilation graph. The ratio of transverse rates $\Gamma_\perp/\Gamma_\parallel$ provides a sensitive test for new right-handed currents. CP violation measurements in $B \to VV$ decays can discriminate between new contributions to the dipole and four quark operators.

Contribution to *Discovery Potential of a High Luminoscity Asymmetric B Factory*, eds. J. Hewett and D. Hitlin

1 Introduction

In this contribution we discuss signals for right-handed currents in rare hadronic B decays. Signals in radiative B decays are reviewed elsewhere in this report. Implications of right-handed currents for CP-violation phenomenology are addressed in $SU(2)_L \times SU(2)_R \times U(1)_{B-L} \times P$ symmetric models, and in the more general case of no left-right symmetry. We will see that it may be possible to distinguish between these scenarios at a high luminosity B factory. Remarkably, the existence of $SU(2)_R$ symmetry could be inferred even if it is broken at a scale many orders of magnitude larger than the weak scale, e.g., $M_R \lesssim M_{\rm GUT}$, in parity symmetric models [1, 2]. An explicit supersymmetric realization is briefly described.

A direct test for right-handed currents from polarization measurements in B decays to light vector meson pairs is also discussed [3]. In the event that non-Standard Model CP-violation is confirmed, e.g., in the $B \to \phi K_s$ time-dependent CP asymmetry, an important question will be whether it arises via New Physics contributions to the four-quark operators, the $b \to sg$ dipole operators, or both. We will see that this question can be addressed by comparing CP asymmetries in the different transversity final states in pure penguin $B \to VV$ decays, e.g., $B \to \phi K^*$. The underlying reason is large suppression of the *transverse* dipole operator matrix elements. It is well known that it is difficult to obtain new $\mathcal{O}(1)$ CP violation effects at the *loop-level* from the *dimension-six* four-quark operators. Thus, this information could help discriminate between scenarios in which New Physics effects are induced via loops versus at tree-level.

Extensions of the Standard Model often include new $b \to s_R$ right-handed currents. These are conventionally associated with opposite chirality effective operators $\tilde{Q}_i$ which are related to the Standard Model operators Q_i by parity transformations,

- QCD Penguin operators

$$\begin{aligned} Q_{3,5} &= (\bar{s}b)_{V-A}\,(\bar{q}q)_{V\mp A} &&\to \tilde{Q}_{3,5} = (\bar{s}b)_{V+A}\,(\bar{q}q)_{V\pm A} \\ Q_{4,6} &= (\bar{s}_i b_j)_{V-A}\,(\bar{q}_j q_i)_{V\mp A} &&\to \tilde{Q}_{4,6} = (\bar{s}_i b_j)_{V+A}\,(\bar{q}_j q_i)_{V\pm A} \end{aligned}$$

- Chromo/Electromagnetic Dipole Operators

$$\begin{aligned} Q_{7\gamma} &= \tfrac{e}{8\pi^2} m_b \bar{s}_i \sigma^{\mu\nu}(1+\gamma_5) b_i F_{\mu\nu} &&\to \tilde{Q}_{7\gamma} = \tfrac{e}{8\pi^2} m_b \bar{s}_i \sigma^{\mu\nu}(1-\gamma_5) b_i F_{\mu\nu} \\ Q_{8g} &= \tfrac{g_s}{8\pi^2} m_b \bar{s} \sigma^{\mu\nu}(1+\gamma_5) t^a b G^a_{\mu\nu} &&\to \tilde{Q}_{8g} = \tfrac{g_s}{8\pi^2} m_b \bar{s} \sigma^{\mu\nu}(1-\gamma_5) t^a b G^a_{\mu\nu} \end{aligned}$$

- Electroweak Penguin Operators

$$\begin{aligned} Q_{7,9} &= \tfrac{3}{2}(\bar{s}b)_{\rm V-A}\, e_q\, (\bar{q}q)_{\rm V\pm A} &&\to \tilde{Q}_{7,9} = \tfrac{3}{2}(\bar{s}b)_{\rm V+A}\, e_q\, (\bar{q}q)_{\rm V\mp A} \\ Q_{8,10} &= \tfrac{3}{2}(\bar{s}_i b_j)_{\rm V-A}\, e_q\, (\bar{q}_j q_i)_{\rm V\pm A} &&\to \tilde{Q}_{8,10} = \tfrac{3}{2}(\bar{s}_i b_j)_{\rm V+A}\, e_q\, (\bar{q}_j q_i)_{\rm V\mp A} \end{aligned}$$

Examples of New Physics which could give rise to right-handed currents include supersymmetric loops which contribute to the QCD penguin or chromomagnetic dipole operators. These are discussed in detail elsewhere in this report. Figure 1 illustrates the well

known squark-gluino loops in the squark mass-insertion approximation. For example, the down-squark mass-insertion $\delta m^2_{\tilde{b}_R \tilde{s}_L}$ ($\delta m^{2\,*}_{\tilde{s}_R \tilde{b}_L}$) would contribute to Q_{8g} ($\tilde{Q}_{8g}$), whereas $\delta m^2_{\tilde{b}_L \tilde{s}_L}$ ($\delta m^2_{\tilde{s}_R \tilde{b}_R}$) would contribute to $Q_{3,..6}$ ($\tilde{Q}_{3,..,6}$). Right-handed currents could also arise at tree-level via new contributions to the QCD or electroweak penguin operators, e.g., due to flavor-changing $Z^{(\prime)}$ couplings, R-parity violating couplings, or color-octet exchange.

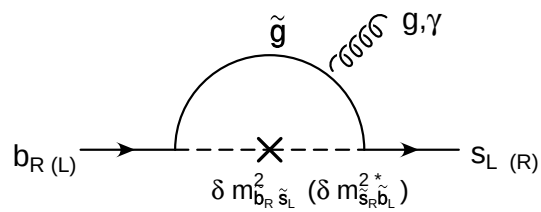

Figure 1: Down squark-gluino loop contributions to the Standard Model and opposite chirality dipole operators in the squark mass insertion approximation.

2 Null Standard Model CP asymmetries

We exploit the large collection of *pure-penguin* $B \to f$ decay modes, which in the Standard Model have

- null decay rate CP-asymmetries, $A_{CP}(f) \sim 1\%$, or
- null deviations of the time-dependent CP-asymmetry coefficient $S_{f_{\rm CP}}$ from $(\sin 2\beta)_{J/\Psi K_s}$ in decays to CP-eigenstates, $|(\sin 2\beta)_{J/\Psi K_s} + (-)^{\rm CP} S_{f_{\rm CP}}| \sim 1\%$, or
- null triple-product CP-asymmetries $A_T^{0,\|}(f) \sim 1\%$ in $B \to VV$ decays.

We recall that there are three helicity amplitudes $\bar{\mathcal{A}}^h$ ($h = 0, -, +$) in $\bar{B} \to VV$ decays: $\bar{\mathcal{A}}^0$, in which both vectors are longitudinaly polarized; $\bar{\mathcal{A}}^-$, in which both vectors have negative helicity; and $\bar{\mathcal{A}}^+$, in which both vectors have positive helicity. In the transversity basis [4], the amplitudes are given by,

$$\bar{\mathcal{A}}_{\perp,\|} = (\bar{\mathcal{A}}^- \mp \bar{\mathcal{A}}^+)/\sqrt{2}, \quad \bar{\mathcal{A}}_0 = \bar{\mathcal{A}}^0 \tag{1}$$

In B decays, $\mathcal{A}_{\perp,\|} = (\mathcal{A}^+ \mp \mathcal{A}^-)/\sqrt{2}$. The CP-violating triple-products [5] (related to $\vec{q} \cdot \vec{\epsilon}_1 \times \vec{\epsilon}_2$) are then given by

$$A_T^{0\,(\|)} = \frac{1}{2}\left(\frac{{\rm Im}(\bar{\mathcal{A}}_{\perp\,(\|)} \bar{\mathcal{A}}_0^*)}{\sum |\bar{\mathcal{A}}_i|^2} - \frac{{\rm Im}(\mathcal{A}_{\perp\,(\|)} \mathcal{A}_0^*)}{\sum |\mathcal{A}_i|^2} \right) . \tag{2}$$

The triple-products are discussed in detail in the contribution of A. Datta.

A partial list of null Standard Model CP asymmetries in pure-penguin decays is given below [6],

- $A_{CP}(K^0\pi^\pm)$, $A_{CP}(\eta' K^\pm)$, $A_{CP}(\phi K^{*0,\pm})_{0,\|,\perp}$, $A_{CP}(K^{*0}\pi^\pm)$, $A_{CP}(K^{*0}\rho^\pm)_{0,\|,\perp}$, $A_{CP}(K_1\pi^\pm)$, $A_{CP}(K^0 a_1^\pm)$, $A_{CP}(\phi K^{0,\pm})$,...
- $S_{\phi K_s}$, $S_{\eta' K_s}$, $(S_{\phi K^{*0}})_{0,\|,\perp}$, $(S_{\phi K_1})_{0,\|,\perp}$, $S_{K_s K_s K_s}$,...
- $A_T^{0,\|}(\phi K^{*0,\pm})$, $A_T^{0,\|}(K^{*0}\rho^\pm)$,...

In addition, there are several modes which are penguin-dominated and are predicted to have approximately null or small Standard Model asymmetries, e.g., $S_{K^+K^-K^0}$ (ϕ subtracted) [7, 8], $S_{K_s\pi^0}$ [9], and $S_{f^0 K_s}$.

3 Right-handed currents and CP-violation

Under parity, the effective operators transform as $Q_i \leftrightarrow \tilde{Q}_i$. The New Physics amplitudes, for final states f with parity P_f, therefore satisfy

$$\langle f|Q_i|B\rangle = -(-)^{P_f}\langle f|\tilde{Q}_i|B\rangle \;\Rightarrow\; A_i^{NP}(B\to f) \propto C_i^{\rm NP}(\mu_b) - (-)^{P_f}\tilde{C}_i^{\rm NP}(\mu_b)\,, \tag{3}$$

where $C_i^{\rm NP}$ and $\tilde{C}_i^{\rm NP}$ are the new Wilson coefficient contributions to the i'th pair of Standard Model and opposite chirality operators [10]. It follows that for decays to PP, VP, and SP final states, where S, P and V are scalar, pseudoscalar, and vector mesons, respectively, the New Physics amplitudes satisfy

$$A_i^{\rm NP}(B\to PP) \propto C_i^{\rm NP}(\mu_b) - \tilde{C}_i^{\rm NP}(\mu_b), \quad A_i^{\rm NP}(B\to VP) \propto C_i^{\rm NP}(\mu_b) + \tilde{C}_i^{\rm NP}(\mu_b)$$

$$A_i^{\rm NP}(B\to SP) \propto C_i^{\rm NP}(\mu_b) + \tilde{C}_i^{\rm NP}(\mu_b)\,. \tag{4}$$

In $B\to VV$ decays the $\perp$ transversity and 0, $\|$ transversity final states are P-odd and P-even, respectively, yielding

$$A_i^{NP}(B\to VV)_{0,\|} \propto C_i^{\rm NP}(\mu_b) - \tilde{C}_i^{\rm NP}(\mu_b), \quad A_i^{NP}(B\to VV)_{\perp} \propto C_i^{\rm NP}(\mu_b) + \tilde{C}_i^{\rm NP}(\mu_b)\,. \tag{5}$$

Similarly, replacing one of the vector mesons with an axial-vector meson gives

$$A_i^{NP}(B\to VA)_{0,\|} \propto C_i^{\rm NP}(\mu_b) + \tilde{C}_i^{\rm NP}(\mu_b), \quad A_i^{NP}(B\to VA)_{\perp} \propto C_i^{\rm NP}(\mu_b) - \tilde{C}_i^{\rm NP}(\mu_b)\,. \tag{6}$$

It is useful to classify the null and approximately null Standard Model CP asymmetries listed above according to whether the final state is P-odd or P-even,

- P-even: $A_{CP}(K^0\pi^\pm)$, $A_{CP}(\eta' K^\pm)$, $A_{CP}(\phi K^{*\pm})_{0,\|}$, $S_{\eta' K_s}$, $(S_{\phi K^{*0}})_{0,\|}$, $A_{CP}(K^{*0}\rho^\pm)_{0,\|}$, $A_{CP}(K_1\pi^\pm)$, $A_{CP}(K^0 a_1^\pm)$, $(S_{\phi K_1})_\perp$,...
- P-odd: $A_{CP}(\phi K^\pm)$, $S_{\phi K_s}$, $A_{CP}(K^{*0}\pi^\pm)$, $A_{CP}(\phi K^{*\pm})_\perp$, $(S_{\phi K^{*0}})_\perp$, $(S_{\phi K_1})_{0,\|}$,...
- Modes with small Standard Model asymmetries: $S_{K^+K^-K^0}$ (approximately P-even), $S_{K_s\pi^0}$ (P-even), and $S_{f^0 K_s}$ (P-odd).

We are now ready to discuss implications for CP violation phenomenology in the two classes of models mentioned earlier.

3.1 Parity symmetric New Physics

In the limit in which New Physics is parity symmetric at the weak scale the relation $C_i^{\rm NP}(\mu_W) = \tilde{C}_i^{\rm NP}(\mu_W)$ would hold. In light of (3) this would imply [10, 1]

- preservation of null *CP* asymmetry predictions in *P-even* final states. Similarly, the ϵ'/ϵ constraint would be trivially satisfied.
- possibly large departures from null *CP* asymmetries in *P-odd* final states.

For example, no deviations in $S_{\eta' K_s}$, $(S_{\phi K^{*0}})_{0,\|}$, $A_{CP}(\phi K^{*\pm})$, $A_{CP}(K^0\pi^\pm)$ could be accompanied by significant deviations in $S_{\phi K_s}$, $A_{CP}(\phi K^\pm)$, $(S_{\phi K^{*0}})_\perp$, and $S_{f^0 K_s}$. Both of the triple-products A_T^0 and $A_T^\|$ in (2) could be affected through a modification of $\mathcal{A}_\perp(VV)$. However, there would be no novel *CP* asymmetry in the interference of the parallel and longitudinal polarizations. Equivalently, the measurable quantities Δ_0 and $\Delta_\|$ defined below

$$\Delta_{0\,(\|)} = (\mathrm{Arg}\,\bar{\mathcal{A}}_{0\,(\|)} - \mathrm{Arg}\,\bar{\mathcal{A}}_\perp) - (\mathrm{Arg}\,\mathcal{A}_{0\,(\|)} - \mathrm{Arg}\,\mathcal{A}_\perp) \tag{7}$$

would be equal.

Parity-symmetric new physics requires $SU(2)_L \times SU(2)_R \times U(1)_{B-L} \times P$ symmetry at high energies. Thus, exact weak scale parity can not be realized due to renormalization group effects below the $SU(2)_R$ breaking scale, M_R. Potentially, the largest source of parity violation is the difference between the top and bottom quark Yukawa couplings. In particular, when $\lambda^t \neq \lambda^b$ the charged Higgs Yukawa couplings break parity. Two scenarios for the Yukawa couplings naturally present themselves:

- moderate $\tan\beta$, or $\lambda^t >> \lambda^b$
- maximal-parity: $\lambda^b = \lambda^t + \mathcal{O}(V_{cb})$ or $\tan\beta \cong m_t/m_b$ Small corrections to the limit of equal up and down Yukawa matrices are required in order to generate the observed CKM quark mixings and light quark masses. V_{cb} therefore sets the scale for minimal parity violation in the Yukawa sector.

A large hierarchy between the $SU(2)_R$ breaking scale and the weak scale can be realized naturally in supersymmetric left-right symmetric models. These models contain two Higgs bidoublet superfields $\Phi_{1,2}(2_L, 2_R, 0_{B-L})$ (or four $SU(2)_L$ doublets). Via the 'doublet-doublet splitting' mechanism [11] two linear combinations of the Higgs doublets acquire masses of order M_R, leaving the two light Higgs doublets of the MSSM. Realization of approximately parity symmetric contributions to the *dipole* operators favors explicit *CP* violation. Spontaneous *CP* violation could lead to complex *P*-violating vacuum expectation values which would feed into new loop contributions to the operators. For example, *P* invariance above the weak scale would imply

$$C_{8g}^{\rm NP} = \kappa\langle\phi\rangle, \qquad \tilde{C}_{8g}^{\rm NP} = \kappa\langle\phi^\dagger\rangle, \tag{8}$$

where $\langle\phi\rangle$ breaks $SU(2)_L$ and $\kappa \sim 1/M_{\rm NP}^2$ is in general complex due to explicit *CP* violating phases. ($M_{\rm NP}$ is an order TeV new physics scale, e.g., the squark or gluino

masses in Figure 1). Thus, $\langle\phi\rangle$ would have to be real to good approximation in order to obtain $C_{8g}^{\rm NP} \approx \tilde{C}_{8g}^{\rm NP}$. Note that this also requires real gaugino masses; otherwise RGE effects would induce a complex Higgs bilinear B term in the scalar potential, thus leading to complex $\langle\phi\rangle$. Ordinary parity symmetry insures real $U(1)_{B-L}$ and $SU(3)_C$ gaugino masses. Real $SU(2)_L \times SU(2)_R$ gaugino masses naturally follow from the $SO(10)$ generalization of parity [12]. All the VEVs entering new *four-quark* operator loops can, in principle, be parity neutral. Therefore, real VEVs are less crucial for obtaining approximately parity-symmetric four-quark operator contributions.

We have carried out a two-loop RGE analysis for down squark-gluino loop contributions to the dipole operators. Choosing parity symmetric boundary conditions at M_R, taking $M_R \leq M_{\rm GUT}$, and running to the weak scale we obtain

- Moderate $\tan\beta$, e.g. , $\tan\beta \sim 5$:

$$\frac{{\rm Re}[C_{8g}^{\rm NP}(m_W) - \tilde{C}_{8g}^{\rm NP}(m_W)]}{{\rm Re}[C_{8g}^{\rm NP}(m_W) + \tilde{C}_{8g}^{\rm NP}(m_W)]} \leq 10\%, \qquad \frac{{\rm Im}[C_{8g}^{\rm NP}(m_W) - \tilde{C}_{8g}^{\rm NP}(m_W)]}{{\rm Im}[C_{8g}^{\rm NP}(m_W) + \tilde{C}_{8g}^{\rm NP}(m_W)]} \leq 10\%$$

- Maximal parity, $\tan\beta \cong m_t/m_b$

$$\frac{{\rm Im}[C_{8g}^{\rm NP}(m_W) - \tilde{C}_{8g}^{\rm NP}(m_W)]}{{\rm Im}[C_{8g}^{\rm NP}(m_W) + \tilde{C}_{8g}^{\rm NP}(m_W)]} = O(1\%)$$

The above quantities give a measure of parity violation in the weak scale Wilson coefficients. Thus, we see that for $M_R \leq M_{\rm GUT}$, new CP violating contributions to the low energy Lagrangian could respect parity to $\mathcal{O}(1\%)$. Precision CP violation measurements in B decays which respect (violate) null SM predictions in P-even (P-odd) final states would therefore provide evidence for $SU(2)_L \times SU(2)_R \times U(1)_{B-L} \times P$ symmetry, even if $SU(2)_R$ is broken at the GUT scale. Similar results are obtained for survival of parity in the four-quark operators [2].

3.1.1 The ^{199}Hg mercury edm constraint

Any discussion of dipole operator phenomenology must consider the upper bound on the strange quark chromo-electric dipole moment d_s^C, obtained from the upper bound on the ^{199}Hg mercury edm [13]. Correlations between d_s^C and new CP violating contributions to C_{8g}, $\tilde{C}_{8g}$ are most easily seen by writing the dipole operator effective Hamiltonian in the weak interaction basis,

$$\frac{G_F}{\sqrt{2}}\, V_{cb}V_{cs}\, C_{i_L j_R}\, \frac{g_s}{8\pi^2} m_b\, \bar{i}\, \sigma^{\mu\nu}(1+\gamma^5)\, j\, G_{\mu\nu} + h.c.. \tag{9}$$

$|i_L\rangle$ and $|i_R\rangle$ ($i = 1,2,3$) are the left-handed and right-handed down quark weak interaction eigenstates, respectively. The mass eigenstates can be written as $|d^i_{L(R)}\rangle = x_{ij}^{L(R)}|i_{L(R)}\rangle$, where $d^{1,2,3}$ stands for the d, s, b quarks, respectively, and $x_{ii}^{L,R} \approx 1$. The

bound on d_s^C is $\mathrm{Im}\, C_{s_L s_R} \lesssim 4 \times 10^{-4}$, with large theoretical uncertainty, where $C_{s_L s_R}$ is the flavor diagonal strange quark dipole operator coefficient (in the mass eigentate basis). It is given as

$$C_{s_L s_R} \approx C_{2_L 2_R} + x_{23}^{L*} C_{3_L 2_R} + x_{23}^R C_{2_L 3_R} + x_{23}^{L*} x_{23}^R C_{3_L 3_R} + \dots . \tag{10}$$

Similarly, the $b \to sg$ Wilson coefficients are given as

$$C_{8g} \approx C_{2_L 3_R} + x_{23}^{L*} C_{3_L 3_R} + \dots, \quad \tilde{C}_{8g} \approx C^*_{3_L 2_R} + x_{23}^{R*} C^*_{3_L 3_R} + \dots \tag{11}$$

If significant contributions to the CKM matrix elements are generated in the down quark sector, then $x_{23}^L, x_{32}^L \sim V_{cb}$, $x_{13}^L, x_{31}^L \sim V_{ub}$, and $x_{12}^L, x_{21}^L \sim \theta_c$. In the absence of special flavor symmetries, similar magnitudes would be expected for the corresponding right-handed quark mixing coefficients, x_{ij}^R. Generically, we therefore expect $C_{s_L s_R} \sim V_{cb} C_{8g}$. $S_{\phi K_s} < 0$ would correspond to $\mathrm{Im}\,[C_{8g}(m_b) + \tilde{C}_{8g}(m_b)] \sim 1$. Thus, $\mathcal{O}(1)$ *CP* violating effects generically correspond to a value for d_s^C which is a factor of 100 too large. One way to evade this bound is by invoking some mechanism, e.g., flavor symmetries, for generating the large hierarchies $x_{23}^R << x_{23}^L$ and $C_{3_L 2_R} << C_{2_L 3_R}$. An elegant alternative is provided by parity symmetry [14]. It is well known that edm's must vanish in the parity symmetric limit, see e.g. [12]. For example, in (10) exact parity would imply $x_{23}^L = x_{23}^R$, $C_{3_L 2_R} = C^*_{2_L 3_R}$ and real $C_{i_L i_R}$, thus yielding a real coefficient, $C_{s_L s_R}$. An RGE analysis along the lines discussed above is required in order to determine the extent to which this can be realized at low energies. We find that in both the maximal parity scenario ($\tan\beta \cong m_t/m_b$) and in moderate $\tan\beta$ scenarios it is possible to obtain $S_{\phi K_s} < 0$ and at the same time satisfy the bound on d_s^C if $M_R \leq M_{\mathrm{GUT}}$ [2].

3.2 Generic case: Right-handed currents without Parity

In the parity-symmetric scenario, an unambiguous theoretical interpretation of the pattern of *CP* violation is possible because null predictions are maintained for the P-even final states. However, if new contributions to the Q_i and $\tilde{Q}_i$ operators are unrelated, then *CP* asymmetries in the P-odd and P-even null Standard Model modes could differ significantly both *from each other, and from the null predictions.* This is due to the opposite relative sign between the left-handed and right-handed New Physics amplitudes for P-odd and P-even final states in Eqs. (3)– (6). For example, $S_{\phi K_s}$ and $S_{\eta' K_s}$ could be affected differently in the MSSM [15, 16]. An interesting illustration would be provided by models with $O(1)$ contributions to the $\tilde{Q}_i$, and negligible new contributions to the Q_i. This could happen, for example, in supersymmetric models with large (negligible) $\tilde{s}_{R(L)} - \tilde{b}_{R(L)}$ squark mixing [16]–[19], or in models in which R-parity violation induces opposite chirality four-quark operators at the tree-level [20]. Unrelated right-handed currents could also arise in warped extra dimension models with bulk left-right symmetry [21].

Unfortunately, *CP* asymmetry predictions have large theoretical uncertainties due to $1/m$ power corrections, especially from the QCD penguin annihilation amplitudes. They

are therefore difficult to interpret. An illustration is provided in Figure 2, which compares predictions for $S_{\phi K_s}$ and $S_{\pi^0 K_s}$ arising from new contributions to Q_{8g} and $\tilde{Q}_{8g}$ in QCD factorization [23, 24]. For $S_{\phi K_s}$ we take $C_{8g}^{\rm NP}(m_W) + \tilde{C}_{8g}^{\rm NP}(m_W) = e^{i\theta}$. For $S_{\pi^0 K_s}$ two corresponding cases are considered: (a) a purely left-handed current, $C_{8g}^{\rm NP}(m_W) = e^{i\theta}$, $\tilde{C}_{8g}^{\rm NP}(m_W) = 0$, (b) a purely right-handed current, $C_{8g}^{\rm NP}(m_W) = 0$, $\tilde{C}_{8g}^{\rm NP}(m_W) = e^{i\theta}$. The scatter plots scan over the input parameter ranges given in [24] (with the exception of the Gegenbauer moments of the light meson light-cone distribution amplitudes and m_c/m_b, which have been set to their default values). In addition, the branching ratios are required to lie within their 90% c.l. intervals.

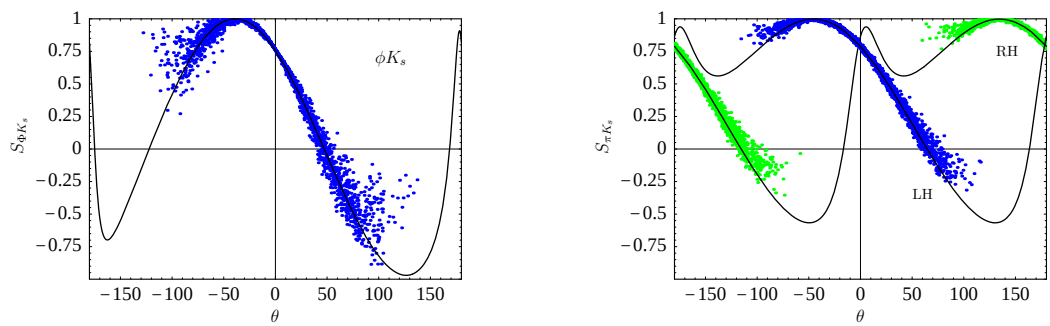

Figure 2: Scatter plots in QCD factorization for $S_{\phi K_s}$ vs. θ for $C_{8g}^{\rm NP}(m_b)+\tilde{C}_{8g}^{\rm NP}(m_b) = e^{i\theta}$, and for $S_{\pi^0 K_s}$ versus θ for left-handed currents, $C_{8g}^{\rm NP}(m_b) = e^{i\theta}$, $\tilde{C}_{8g}^{\rm NP} = 0$ (blue), and for right-handed-currents, $C_{8g}^{\rm NP} = 0$, $\tilde{C}_{8g}^{\rm NP}(m_b) = e^{i\theta}$ (green).

Clearly, very different values for the two CP asymmetries can be realized if the New Physics only appears in Q_{8g}. For example, for $\theta \sim 50°$, it is possible to obtain $S_{\phi K_s} \sim -0.35$ and $S_{\pi^0 K_s} \sim 0.4$. The theoretical uncertainty in $S_{\eta' K_s}$ is larger than for $S_{\pi^0 K_s}$. We therefore expect that even larger differences are possible between $S_{\eta' K_s}$ and $S_{\phi K_s}$, for purely left-handed currents. However, Figure 2 suggests that $S_{\phi K_s} < 0$ and $S_{\pi^0 K_s} > (\sin 2\beta)_{J/\Psi K_s}$ ($S_{\pi^0 K_s} = (\sin 2\beta)_{J/\Psi K_s}$ is realized at $\theta = 0$) could be a signal for right-handed currents [16]. More theoretical studies are needed in order to determine if this is indeed the case. In particular, a more thorough analysis of uncertainties due to $O(1/m)$ effects needs to be undertaken. For example, power corrections to the dipole operator matrix elements remain to be included. Furthermore, the impact on $S_{\phi K_s}$, $S_{\pi^0 K_s}$ of New Physics in all of the 'left-handed' four-quark operators needs to be thoroughly studied.

4 Polarization and CP violation in $B \to VV$ decays

A discussion of polarization in $B \to VV$ decays has been presented in [3] in the framework of QCD factorization. Here we summarize some of the results. To begin with we note

that the polarization should be sensitive to the $V-A$ structure of the Standard Model, due to the power suppression associated with the 'helicity-flip' of a collinear quark. For example, in the Standard Model the factorizable graphs for $\bar{B} \to \phi K^*$ are due to transition operators with chirality structures $(\bar{s}b)_{V-A}(\bar{s}s)_{V\mp A}$, see Figure 3 . In the helicity amplitude $\bar{\mathcal{A}}^-$ a collinear s or $\bar{s}$ quark with positive helicity ends up in the negatively polarized ϕ, whereas in $\bar{\mathcal{A}}^+$ a second quark 'helicity-flip' is required in the form factor transition. Collinear quark helicity flips require transverse momentum, $k_\perp$, implying a suppression of $O(\Lambda_{\rm QCD}/m_b)$ per flip. In the case of new right-handed currents, e.g., $(\bar{s}b)_{V+A}(\bar{s}s)_{V\pm A}$, the helicity amplitude hierarchy would be inverted, with $\bar{\mathcal{A}}^+$ and $\bar{\mathcal{A}}^-$ requiring one and two helicity-flips, respectively.

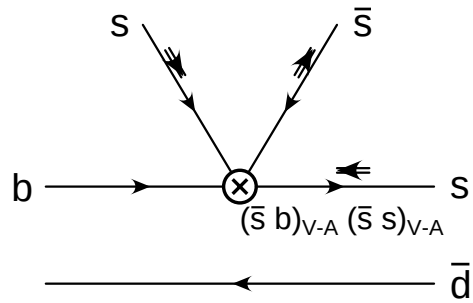

Figure 3: Quark helicities (short arrows) for the $\bar{B} \to \phi K^*$ matrix element of the operator $(\bar{s}b)_{V-A}(\bar{s}s)_{V-A}$ in naive factorization. Upward lines form the ϕ meson.

In naive factorization the $\bar{B} \to \phi K^*$ helicity amplitudes, supplemented by the large energy form factor relations [25], satisfy

$$\bar{\mathcal{A}}^0 \propto f_\phi m_B^2\, \zeta_\parallel^{K^*}, \quad \bar{\mathcal{A}}^- \propto -f_\phi m_\phi m_B\, 2\, \zeta_\perp^{K^*}, \quad \bar{\mathcal{A}}^+ \propto -f_\phi m_\phi m_B\, 2\, \zeta_\perp^{K^*} r_\perp^{K^*}. \tag{12}$$

$\zeta_\parallel^V$ and $\zeta_\perp^V$ are the $B \to V$ form factors in the large energy limit [25]. Both scale as $m_b^{-3/2}$ in the heavy quark limit, implying $\bar{\mathcal{A}}^-/\bar{\mathcal{A}}^0 = O(m_\phi/m_B)$. $r_\perp$ parametrizes form factor helicity suppression. It is given by

$$r_\perp = \frac{(1+m_{V_1}/m_B)A_1^{V_1} - (1-m_{V_1}/m_B)V^{V_1}}{(1+m_{V_1}/m_B)A_1^{V_1} + (1-m_{V_1}/m_B)V^{V_1}}, \tag{13}$$

where $A_{1,2}$ and V are the axial-vector and vector current form factors, respectively. The large energy relations imply that $r_\perp$ vanishes at leading power, reflecting the fact that helicity suppression is $O(1/m_b)$. Thus, $\bar{\mathcal{A}}^+/\bar{\mathcal{A}}^- = O(\Lambda_{\rm QCD}/m_b)$. Light-cone QCD sum rules [26], and lattice form factor determinations scaled to low q^2 using the sum rule approach [27], give $r_\perp^{K^*} \approx 1-3\,\%$; QCD sum rules give $r_\perp^{K^*} \approx 5\,\%$ [28]; and the BSW model gives $r_\perp^{K^*} \approx 10\%$ [29].

The polarization fractions in the transversity basis (1) therefore satisfy

$$1 - f_L = \mathcal{O}\left(1/m_b^2\right), \quad f_\perp/f_\parallel = 1 + \mathcal{O}\left(1/m_b\right), \tag{14}$$

in naive factorization, where the subscript L refers to longitudinal polarization, $f_i = \Gamma_i/\Gamma_{\rm total}$, and $f_L + f_\perp + f_\parallel = 1$. The measured longitudinal fractions for $B \to \rho\rho$ are close to 1 [30, 31]. This is not the case for $B \to \phi K^{*0}$ for which full angular analyses yield

$$f_L = .43 \pm .09 \pm .04, \quad f_\perp = .41 \pm .10 \pm .04 \;\; [32] \tag{15}$$

$$f_L = .52 \pm .07 \pm .02, \quad f_\perp = .27 \pm .07 \pm .02 \;\; [33]. \tag{16}$$

Naively averaging the Belle and BaBar measurements (without taking correlations into account) yields $f_\perp/f_\parallel = 1.39 \pm .69$. We must go beyond naive factorization in order to determine if the small value of $f_L(\phi K^*)$ could simply be due to the dominance of QCD penguin operators in $\Delta S = 1$ decays, rather than New Physics. In particular, it is necessary to determine if the power counting in (14) is preserved by non-factorizable graphs, i.e., penguin contractions, vertex corrections, spectator interactions, annihilation graphs, and graphs involving higher Fock-state gluons. This question can be addressed in QCD factorization [3].

In QCD factorization exclusive two-body decay amplitudes are given in terms of convolutions of hard scattering kernels with meson light-cone distribution amplitudes [22]–[24]. At leading power this leads to factorization of short and long-distance physics. This separation breaks down at sub-leading powers with the appearance of logarithmic infrared divergences, e.g., $\int_0^1 dx/x \sim \ln m_B/\Lambda_h$, where x is the light-cone quark momentum fraction in a final state meson, and $\Lambda_h \sim \Lambda_{\rm QCD}$ is a physical infrared cutoff. Nevertheless, the power-counting for all amplitudes can be obtained. The extent to which it holds numerically can be determined by assigning large uncertainties to the logarithmic divergences. Fortunately, certain polarization observables are less sensitive to this uncertainty, particularly after experimental constraints, e.g., total rate or total transverse rate, are imposed.

Figure 4: Quark helicities in $\bar{B} \to \phi K^*$ matrix elements: the hard spectator interaction for the operator $(\bar{s}b)_{V-A}(\bar{s}s)_{V\mp A}$ (left), and annihilation graphs for the operator $(\bar{d}b)_{S-P}(\bar{s}d)_{S+P}$ with gluon emitted from the final state quarks (right).

Examples of logarithmically divergent hard spectator interaction and QCD penguin annihilation graphs are shown in Figure 4, with the quark helicities indicated. The power counting for the helicity amplitudes of the annihilation graph, including logarithmic

divergences, is

$$\bar{\mathcal{A}}^0,\ \bar{\mathcal{A}}^- = O\left(\frac{1}{m^2}\ln^2\frac{m}{\Lambda_h}\right), \qquad \bar{\mathcal{A}}^+ = O\left(\frac{1}{m^4}\ln^2\frac{m}{\Lambda_h}\right). \tag{17}$$

The logarithmic divergences are associated with the limit in which both the s and $\bar{s}$ quarks originating from the gluon are soft. The annihilation topology implies an overall factor of $1/m_b$. Each remaining factor of $1/m_b$ is associated with a quark helicity flip. In fact, adding up all of the helicity amplitude contributions in QCD factorization *formally* preserves the naive factorization power counting in (14) [34, 3]. Recently, the first relation in (14) has been confirmed in the soft collinear effective theory [35]. However, as we will see below, it need not hold numerically because of QCD penguin annihilation.

4.1 Numerical results for polarization

The numerical inputs are given in [3]. The logaritmic divergences are modeled as in [23, 24]. For example, in the annihilation amplitudes the quantities X_A are introduced as

$$\int_0^1 \frac{dx}{x} \to X_A = (1+\varrho_A e^{i\varphi_A})\ln\frac{m_B}{\Lambda_h}\,; \quad \varrho_A \le 1\,, \quad \Lambda_h \approx 0.5\,\mathrm{GeV}\,. \tag{18}$$

This parametrization reflects the physical $O(\Lambda_{\rm QCD})$ cutoff, and allows for large strong phases $\varphi_A \in [0, 2\pi]$ from soft rescattering. The quantities X_A (and the corresponding hard spectator interaction quantities X_H) are varied independently for unrelated convolution integrals.

The predicted longitudinal polarization fractions $f_L(\rho^-\rho^0)$ and $f_L(\rho^-\rho^+)$ are close to unity, in agreement with observation [30, 31] and with naive power counting (14). The theoretical uncertainties are small, particularly after imposing the branching ratio constraints, due to the absence of (for $\rho^-\rho^0$) or CKM suppression of (for $\rho^-\rho^+$) the QCD penguin amplitudes.

Averaging the Belle and BaBar $\bar{B} \to \phi K^{*0}$ measurements [32, 33, 31] yields $f_L^{\rm exp} = .49 \pm .06$ and $\mathrm{Br}^{\rm exp} = 10.61 \pm 1.21$, or $\mathrm{Br}_L^{\rm exp} = 5.18 \pm .86$ and $\mathrm{Br}_T^{\rm exp} = 5.43 \pm .88$. Br_L and $\mathrm{Br}_T = \mathrm{Br}_\perp + \mathrm{Br}_\parallel$ are the CP-averaged longitudinal and total transverse branching ratios, respectively. In the absence of annihilation, the predicted branching ratios are $10^6\,\mathrm{Br}_L = 5.15^{+6.79+.88}_{-4.66-.81}$ and $10^6\,\mathrm{Br}_T = .61^{+.60+.38}_{-.42-.29}$, where the second (first) set of error bars is due to variations of X_H (all other inputs). However, the $(S+P)(S-P)$ QCD penguin annihilation graph in Figure 4 can play an important role in both $\bar{\mathcal{A}}^0$ and $\bar{\mathcal{A}}^-$ due to the appearance of a logarithmic divergence squared (X_A^2), the large Wilson coefficient C_6, and a $1/N_c$ rather than $1/N_c^2$ dependence. Although formally $O(1/m^2)$, see (17), these contributions can be $O(1)$ numerically. This is illustrated in Figure 5, where Br_L and Br_T are plotted versus the quantities ρ_A^0 and ρ_A^-, respectively, for $\bar{B} \to \phi K^{*0}$. ρ_A^0 and ρ_A^- enter the parametrizations (18) of the logarithmic divergences appearing in the longitudinal and negative helicity $(S+P)(S-P)$ annihilation amplitudes, respectively. As $\rho_A^{0,-}$ increase from 0 to 1, the corresponding annihilation amplitudes increase by more than an order of magnitude. The theoretical uncertainties on the rates are very

large. Furthermore, the largest input parameter uncertainties in Br_L and Br_T are a priori unrelated. Thus, it is clear from Figure 5 that the QCD penguin annihilation amplitudes can account for the ϕK^{*0} measurements. Similarly, the BaBar measurement of $f_L(\phi K^{*-}) \approx 50\%$ [31] can be accounted for.

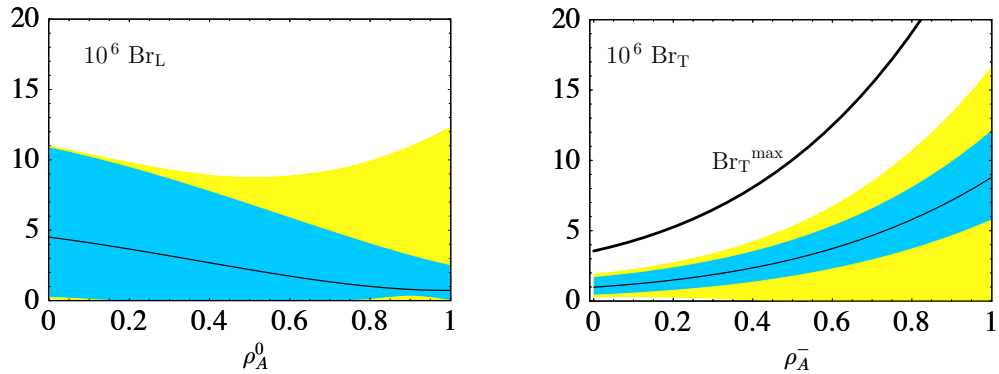

Figure 5: $\mathrm{Br}_L(\phi K^{*0})$ vs. ρ_A^0 (left), $\mathrm{Br}_T(\phi K^{*0})$ vs. ρ_A^- (right). Black lines: default inputs. Blue bands: input parameter variation uncertainties added in quadrature, keeping default annihilation and hard spectator interaction parameters. Yellow bands: additional uncertainties, added in quadrature, from variation of parameters entering logarithmically divergent annihilation and hard spectator interaction power corrections. Thick line: $\mathrm{Br}_T^{\mathrm{max}}$ under simultaneous variation of all inputs.

Do the QCD penguin annihilation amplitudes also imply large transverse polarizations in $B \to \rho K^*$ decays? The answer depends on the pattern of $SU(3)_F$ flavor symmetry violation in these amplitudes. For light mesons containing a single strange quark, e.g., K^*, non-asymptotic effects shift the weighting of the meson distribution amplitudes towards larger strange quark momenta. As a result, the suppression of $s\bar{s}$ popping relative to light quark popping in annihilation amplitudes can be $O(1)$, which is consistent with the order of magnitude hierarchy between the $\bar{B} \to D^0\pi^0$ and $\bar{B} \to D_s^+ K^-$ rates [36]. (See [37] for a discussion of other sources of $SU(3)$ violation). In the present case, this implies that the longitudinal polarizations should satisfy $f_L(\rho^\pm K^{*0}) \lesssim f_L(\phi K^*)$ in the Standard Model [3]. Consequently, $f_L(\rho^\pm K^{*0}) \approx 1$ would suggest that U-spin violating New Physics entering mainly in the $b \to s\bar{s}s$ channel is responsible for the small $f_L(\phi K^*)$. One possibility would be right-handed vector currents; they could interfere constructively (destructively) in $\bar{\mathcal{A}}_\perp$ ($\bar{\mathcal{A}}_0$) transversity amplitudes, see (5). Alternatively, a parity-symmetric scenario would only affect $\bar{\mathcal{A}}_\perp$. A more exotic possibility would be tensor currents; they would contribute to the longitudinal and transverse amplitudes at sub-leading and leading power, respectively, opposite to the vector currents.

We should mention that our treatment of the charm (and up) quark loops in the penguin amplitudes follows the usual perturbative approach used in QCD factorization [22]–[24]. The authors of [35] believe that the region of phase space in which the charm quark pair has invariant mass $q^2 \sim 4m_c^2$, and is thus moving non-relativistically, should

be separated out into a long-distance 'charming penguin' amplitude [38]. NRQCD arguments are invoked to claim that such contributions are $O(v)$, where $v \approx .4 - .5$, so that they could effectively be of leading power. Furthermore, it is claimed that the transverse components may also be of leading power, thus potentially accounting for $f_L(\phi K^*)$. However, a physical mechanism by which a collinear quark helicity-flip could arise in this case without power suppression remains to be clarified. Arguments against a special treatment of this region of phase space [22, 23] are based on parton-hadron duality. It should be noted that in QCD factorization this region of q^2 contributes negligibly to the $B \to VV$ penguin amplitudes, particularly in the transverse components. More recently, the low value of $f_L(\phi K^*)$ has been addressed using a purely hadronic model for soft rescattering of intermediate two-body charm states, i.e., $B \to D_s^{(*)} D^{(*)} \to \phi K^*$ [39]. This approach has been criticized previously on the grounds that a "purely hadronic language, suitable for kaon decays" is not applicable to the case of B decays, where the "number of channels, and the energy release are large" [23]. In particular, many intermediate multi-body channels have been ignored which are predicted to lead to systematic amplitude cancelations in the heavy quark limit.

4.2 A test for right-handed currents

Does the naive factorization relation $f_\perp/f_\parallel = 1 + O(\Lambda_{\rm QCD}/m_b)$ (14) survive in QCD factorization? This ratio is very sensitive to the quantity $r_\perp$ defined in (13). As $r_\perp$ increases, $f_\perp/f_\parallel$ decreases. The range $r_\perp^{K^*} = .05 \pm .05$ spanning existing model determinations [26]–[29] is taken in [3]. In Figure 6 (left) the resulting predictions for $f_\perp/f_\parallel$ and Br_T are studied simultaneaously for $\bar{B} \to \phi K^{*0}$ in the Standard Model. Note that the theoretical uncertainty for $f_\perp/f_\parallel$ is much smaller than for f_L. Evidently, the above relation still holds, particularly at larger values of Br_T where QCD penguin annihilation dominates both $\mathrm{Br}_\perp$ and $\mathrm{Br}_\parallel$.

A ratio for $f_\perp/f_\parallel$ in excess of the Standard Model range, e.g., $f_\perp/f_\parallel > 1.5$ if $r_\perp > 0$, would signal the presence of new right-handed currents. This is due to the inverted hierarchy between $\bar{\mathcal{A}}^-$ and $\bar{\mathcal{A}}^+$ for right-handed currents, and is reflected in the sign difference with which the Wilson coefficients $\tilde{C}_i$ enter $\bar{\mathcal{A}}_\perp$ and $\bar{\mathcal{A}}_\parallel$. For illustration, new contributions to the QCD penguin operators are considered in Figure 6 (right). At the New Physics matching scale M, these can be parametrized as $\overset{(\sim)}{C}_4 = \overset{(\sim)}{C}_6 = -3\overset{(\sim)}{C}_5 = -3\overset{(\sim)}{C}_3 = \overset{(\sim)}{\kappa}$. For simplicity, we take $M \approx M_W$ and consider two cases: $\kappa = -.007$ or new left-handed currents (lower bands), and $\tilde{\kappa} = -.007$ or new right-handed currents (upper bands), corresponding to $C^{NP}_{4\,(5)}(m_b)$ or $\tilde{C}^{NP}_{4\,(5)}(m_b) \approx .18\, C^{SM}_{4\,(5)}(m_b)$, and $C^{NP}_{6\,(3)}(m_b)$ or $\tilde{C}^{NP}_{6\,(3)}(m_b) \approx .25\, C^{SM}_{6\,(3)}(m_b)$. Clearly, moderately sized right-handed currents could increase $f_\perp/f_\parallel$ well beyond the Standard Model range if $r_\perp \geq 0$. However, new left-handed currents would have little effect.

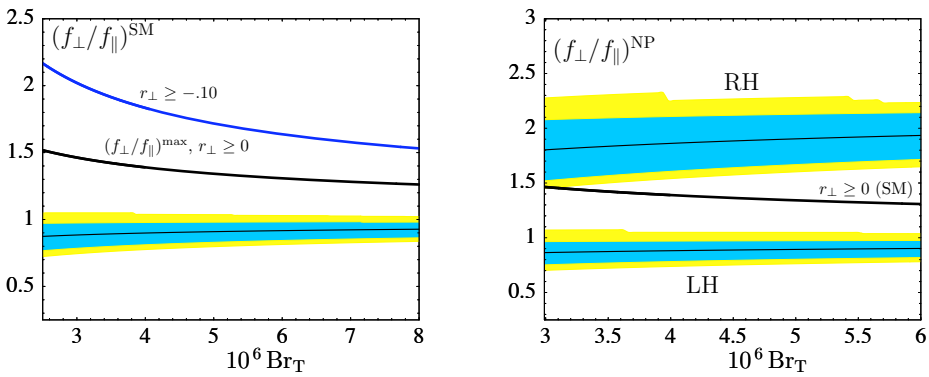

Figure 6: $f_\perp/f_\parallel$ vs. Br_T in the SM (left), and with new RH or LH currents (right). Black lines, blue bands, and yellow bands are as in Figure 5. Thick lines: $(f_\perp/f_\parallel)^{\max}$ in the Standard Model for indicated ranges of $r_\perp^{K^*}$ under simultaneous variation of all inputs. Plot for $r_\perp^{K^*} > 0$ corresponds to $\mathrm{Br}_T^{\max}$ in Figure 5.

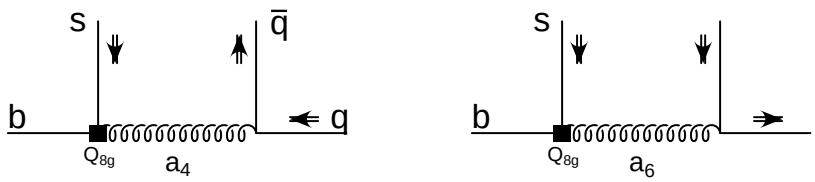

Figure 7: Quark helicities for the $O(\alpha_s)$ penguin contractions of Q_{8g}. The upward lines form the ϕ meson in $\bar{B} \to \phi K^*$ decays.

4.3 Distinguishing four-quark and dipole operator effects

The $O(\alpha_s)$ penguin contractions of the chromomagnetic dipole operator Q_{8g} are illustrated in Figure 7. a_4 and a_6 are the QCD factorization coefficients of the transition operators $(\bar{q}b)_{V-A} \otimes (\bar{D}q)_{V-A}$ and $(\bar{q}b)_{S-P} \otimes (\bar{D}q)_{S+P}$, respectively, where q is summed over u, d, s [23, 24]. Only the contribution on the left (a_4) to the longitudinal helicity amplitude $\bar{\mathcal{A}}^0$ is non-vanishing [3]. In particular, the chromo- and electromagnetic dipole operators Q_{8g} and $Q_{7\gamma}$ *do not contribute to the transverse penguin amplitudes* at $O(\alpha_s)$ due to angular momentum conservation: the dipole tensor current couples to a transverse gluon, but a 'helicity-flip' for q or $\bar{q}$ in Figure 7 would require a longitudinal gluon coupling. Formally, this result follows from Wandura-Wilczek type relations among the vector meson distribution amplitudes, and the large energy relations between the tensor-current and vector-current form factors. Transverse amplitudes in which a vector meson contains a collinear higher Fock state gluon also vanish at $\mathcal{O}(\alpha_s)$, as can be seen from the vanishing of the corresponding partonic dipole operator graphs in the same momentum configurations. Furthermore, the transverse $\mathcal{O}(\alpha_s^2)$ contributions involving spectator interactions are highly suppressed.

This has important implications for New Physics searches. For example, in pure pen-

guin decays to CP-conjugate final states f, e.g., $\bar{B} \to \phi\,(K^{*0} \to K_s\pi^0)$, if the transversity basis time-dependent CP asymmetry parameters $(S_f)_\perp$ and $(S_f)_\parallel$ are consistent with $(\sin 2\beta)_{J/\psi K_s}$, and $(S_f)_0$ is not, then this would signal new CP violating contributions to the chromomagnetic dipole operators. However, deviations in $(S_f)_\perp$ or $(S_f)_\parallel$ would signal new CP violating four-quark operator contributions. If the triple-products A_T^0 and $A_T^\parallel$ (2) do not vanish and vanish, respectively, in pure-penguin decays, then this would also signal new CP violating contributions to the chromomagnetic dipole operators. This assumes that a significant strong phase difference is measured between $\bar{\mathcal{A}}_\parallel$ and $\bar{\mathcal{A}}_\perp$, for which there is some experimental indication [33]. However, non-vanishing $A_T^\parallel$, or non-vanishing transverse direct CP asymmetries would signal the intervention of four-quark operators. The above would help to discriminate between different explanations for an anomalous $S_{\phi K_s}$, which fall broadly into two categories: radiatively generated dipole operators, e.g., supersymmetric loops; or tree-level four-quark operators, e.g., flavor changing (leptophobic) Z' exchange [40], R-parity violating couplings [20], or color-octet exchange [21]. Finally, a large value for $f_\perp/f_\parallel$ would be a signal for right-handed *four-quark* operators.

5 Conclusion

There are a large number of penguin-dominated rare hadronic B decay modes in the Standard Model in which departures from null *CP* asymmetry predictions would be a signal for New Physics. We have seen that in order to detect the possible intervention of new $b \to s_R$ right-handed currents it is useful to organize these modes according to the parity of the final state. $SU(2)_L \times SU(2)_R \times U(1)_{B-L} \times P$ symmetric models in which new *CP* violating contributions to the effective $\Delta B = 1$ Hamiltonian are to good approximation parity symmetric at the weak scale, would only give rise to significant deviations from null *CP* asymmetries in parity-odd final states. For example, no deviations from the null Standard Model *CP* asymmetry predictions in $S_{\eta' K_s}$, $(S_{\phi K^{*0}})_{0,\parallel}$, $A_{CP}(\phi K^{*\pm})_{0,\parallel}$, $A_{CP}(K^0\pi^\pm)$ could be accompanied by significant deviations in $S_{\phi K_s}$, $A_{CP}(\phi K^\pm)$, $A_{CP}(\phi K^{*\pm})_\perp$ $(S_{\phi K^{*0}})_\perp$, and $S_{f^0 K_s}$. This would provide a clean signal for left-right symmetry. However, the precision of *CP* asymmetry measurements necessary to discern the existence of such a pattern would require a high luminosity B factory. Remarkably, approximate parity invariance in the $\Delta B = 1$ effective Hamiltonian can be realized even if the $SU(2)_R$ symmetry breaking scale M_R is as large as $M_{\rm GUT}$. An explicit example in which large departures from the null predictions are possible, but in which deviations from parity invariance can be as small as $O(1\%)$ for $M_R \leq M_{\rm GUT}$, is provided by squark-gluino loops in parity-symmetric SUSY models. It is noteworthy that, due to parity invariance, stringent bounds on new sources of *CP* and flavor violation arising from the ^{199}Hg mercury edm are naturally evaded in such models.

More generally, in models in which new contributions to Standard Model (left-handed) and opposite chirality (right-handed) effective operators are unrelated, the *CP* asymmetries in the P-odd and P-even null Standard Model modes could differ sub-

stantially both from each other, and from the null predictions. This is because the right-handed operator Wilson coefficients enter with opposite sign in the amplitudes for decays to P-odd and P-even final states. Unfortunately, CP asymmetry predictions have large theoretical uncertainties due to $1/m$ power corrections, especially from the QCD penguin annihilation amplitudes. We therefore can not rule out substantial differences between new CP violating effects in parity-even and parity-odd modes arising solely from left-handed currents. However, very large differences, e.g., $S_{\phi K_s} < 0$ and $S_{\pi^0 K_s} > (\sin 2\beta)_{J/\Psi K_s}$, may provide a signal for CP violating right-handed currents. More theoretical work will be required in order to make this statement more precise.

Polarization measurements in B decays to light vector meson pairs offer a unique opportunity to probe the chirality structure of rare hadronic B decays. A Standard Model analysis which includes all non-factorizable graphs in QCD factorization shows that the longitudinal polarization formally satisfies $1 - f_L = \mathcal{O}(1/m^2)$, as in naive factorization. However, the contributions of a particular QCD penguin annihilation graph which is formally $\mathcal{O}(1/m^2)$ can be $\mathcal{O}(1)$ numerically in longitudinal and negative helicity $\Delta S = 1$ $\bar{B}$ decays. Consequently, the observation of $f_L(\phi K^{*0,-}) \approx 50\%$ can be accounted for, albeit with large theoretical errors. The expected pattern of $SU(3)_F$ violation in the QCD penguin annihilation graphs, i.e., large suppression of $s\bar{s}$ relative to $u\bar{u}$ or $d\bar{d}$ popping, implies that the longitudinal polarizations should satisfy $f_L(\rho^{\pm} K^{*0}) \lesssim f_L(\phi K^*)$ in the Standard Model. Consequently, $f_L(\rho^{\pm} K^{*0}) \approx 1$ would suggest that U-spin violating New Physics entering mainly in the $b \to s\bar{s}s$ channel is responsible for the small values of $f_L(\phi K^*)$.

The ratio of transverse rates in the transversity basis satisfies $\Gamma_\perp/\Gamma_\parallel = 1 + \mathcal{O}(1/m)$, in agreement with naive power counting. A ratio in excess of the predicted Standard Model range would signal the presence of new right-handed currents in dimension-6 four-quark operators. The maximum ratio attainable in the Standard Model is sensitive to the $B \to V$ form factor combination $r_\perp$, see (13), which controls helicity suppression in form factor transitions. All existing model determinations give a positive sign for $r_\perp$, which would imply $\Gamma_\perp(\phi K^*)/\Gamma_\parallel(\phi K^*) < 1.5$ in the Standard Model. The magnitude and especially the sign of $r_\perp^{K^*}$ is clearly an important issue which should be clarified further with dedicated lattice studies.

Contributions of the dimension-5 $b \to sg$ dipole operators to the transverse $B \to VV$ modes are highly suppressed, due to angular momentum conservation. Comparison of CP violation involving the longitudinal modes with CP violation only involving the transverse modes in pure penguin $\Delta S = 1$ decays could therefore distinguish between new contributions to the dipole and four-quark operators. More broadly, this could distinguish between scenarios in which New Physics effects are loop induced and scenarios in which they are tree-level induced, as it is difficult to obtain $\mathcal{O}(1)$ CP-violating effects from dimension-6 operators beyond tree-level. Again, a high luminosity B factory will be required in order to obtain the necessary level of precision in CP violation measurements.

Acknowledgments: I would like to thank Martin Beneke, Alakhabba Datta, Keith Ellis, Guy Engelhard, Andrei Gritsan, Yuval Grossman, Matthias Neubert , Uli Nierste, Yossi Nir, Dan Pirjol, and Ian Stewart for useful discussions. This work was supported by the Department of Energy under Grant DE-FG02-84ER40153.

References

[1] A. L. Kagan, talks at SLAC 10^{36} Workshops, May and Oct 2003.

[2] G. Engelhard and A. L. Kagan, in preparation.

[3] A. L. Kagan, University of Cincinnati preprint UCTP-102-04 [arXiv:hep-ph/0405134].

[4] I. Dunietz, H. R. Quinn, A. Snyder, W. Toki and H. J. Lipkin, Phys. Rev. D **43**, 2193 (1991).

[5] G. Valencia, Phys. Rev. D **39**, 3339 (1989); A. Datta and D. London, arXiv:hep-ph/0303159.

[6] For early references on New Physics and null SM modes see: Y. Grossman and M. P. Worah, Phys. Lett. B **395**, 241 (1997) [arXiv:hep-ph/9612269]; R. Fleischer, Int. J. Mod. Phys. A **12**, 2459 (1997) [arXiv:hep-ph/9612446], and in proceedings of 7th International Symposium on Heavy Flavor Physics, Santa Barbara, Jul 1997 [arXiv:hep-ph/9709291]; D. London and A. Soni, Phys. Lett. B **407**, 61 (1997) [arXiv:hep-ph/9704277]; M. Ciuchini, E. Franco, G. Martinelli, A. Masiero and L. Silvestrini, Phys. Rev. Lett. **79**, 978 (1997) [arXiv:hep-ph/9704274]; A. L. Kagan, in proceedings of 2nd International Conference on B Physics and CP Violation, Honolulu, Mar 1997, and 7th International Symposium on Heavy Flavor Physics, Santa Barbara, Jul 1997 [arXiv:hep-ph/9806266].

[7] A. Garmash *et al.* [Belle Collaboration], Phys. Rev. D **69**, 012001 (2004) [arXiv:hep-ex/0307082]; B. Aubert *et al.* [BABAR Collaboration], arXiv:hep-ex/0406005.

[8] Y. Grossman, Z. Ligeti, Y. Nir and H. Quinn, Phys. Rev. D **68**, 015004 (2003) [arXiv:hep-ph/0303171]; M. Gronau and J. L. Rosner, Phys. Lett. B **564**, 90 (2003) [arXiv:hep-ph/0304178].

[9] D. London and A. Soni, in [6]; M. Gronau, Y. Grossman and J. L. Rosner, Phys. Lett. B **579**, 331 (2004) [arXiv:hep-ph/0310020].

[10] A. L. Kagan, talk at SLAC Summer Institute, August 2002.

[11] K. S. Babu, B. Dutta and R. N. Mohapatra, Phys. Rev. D **65**, 016005 (2002) [arXiv:hep-ph/0107100].

[12] R. N. Mohapatra and A. Rasin, Phys. Rev. D **54**, 5835 (1996) [arXiv:hep-ph/9604445].

[13] T. Falk, K. A. Olive, M. Pospelov and R. Roiban, Nucl. Phys. B **560**, 3 (1999) [arXiv:hep-ph/9904393]; M. V. Romalis, W. C. Griffith and E. N. Fortson, Phys. Rev. Lett. **86**, 2505 (2001) [arXiv:hep-ex/0012001]; J. Hisano and Y. Shimizu, Phys. Lett. B **581**, 224 (2004) [arXiv:hep-ph/0308255].

[14] A. L. Kagan, talks at 19th International Workshop on Weak Interactions and Neutrinos, Geneva WI, Oct 2003, and 2004 Phenomenology Symposium, Madison, W May 2004.

[15] S. Khalil and E. Kou, Phys. Rev. Lett. **91**, 241602 (2003) [arXiv:hep-ph/0303214].

[16] C. K. Chua, W. S. Hou and M. Nagashima, Phys. Rev. Lett. **92**, 201803 (2004) [arXiv:hep-ph/0308298].

[17] Y. Nir and N. Seiberg, Phys. Lett. B **309**, 337 (1993) [arXiv:hep-ph/9304307].

[18] T. Moroi, Phys. Lett. B **493**, 366 (2000) [arXiv:hep-ph/0007328].

[19] D. Chang, A. Masiero and H. Murayama, Phys. Rev. D **67**, 075013 (2003) [arXiv:hep-ph/0205111]; R. Harnik, D. T. Larson, H. Murayama and A. Pierce, Phys. Rev. D **69**, 094024 (2004) [arXiv:hep-ph/0212180].

[20] A. Datta, Phys. Rev. D **66**, 071702 (2002) [arXiv:hep-ph/0208016]; B. Dutta, C. S. Kim and S. Oh, Phys. Rev. Lett. **90** (2003) 011801 [arXiv:hep-ph/0208226].

[21] G. Burdman, Phys. Lett. B **590**, 86 (2004) [arXiv:hep-ph/0310144].

[22] M. Beneke, G. Buchalla, M. Neubert and C. T. Sachrajda, Phys. Rev. Lett. **83**, 1914 (1999) [hep-ph/9905312]; Nucl. Phys. B **591**, 313 (2000) [hep-ph/0006124];

[23] M. Beneke, G. Buchalla, M. Neubert and C. T. Sachrajda, Nucl. Phys. B **606**, 245 (2001) [arXiv:hep-ph/0104110].

[24] M. Beneke and M. Neubert, Nucl. Phys. B **675**, 333 (2003) [arXiv:hep-ph/0308039].

[25] J. Charles, A. Le Yaouanc, L. Oliver, O. Pene and J. C. Raynal, Phys. Rev. D **60**, 014001 (1999) [arXiv:hep-ph/9812358].

[26] P. Ball and V. M. Braun, Phys. Rev. D **58**, 094016 (1998) [hep-ph/9805422].

[27] L. Del Debbio, J. M. Flynn, L. Lellouch and J. Nieves, Phys. Lett. B **416**, 392 (1998) [hep-lat/9708008].

[28] P. Colangelo, F. De Fazio, P. Santorelli and E. Scrimieri, Phys. Rev. D **53**, 3672 (1996) [Erratum-ibid. D **57**, 3186 (1998)] [arXiv:hep-ph/9510403].

[29] M. Bauer, B. Stech and M. Wirbel, Z. Phys. C **34**, 103 (1987).

[30] J. Zhang *et al.* [BELLE Collaboration], Phys. Rev. Lett. **91**, 221801 (2003) [arXiv:hep-ex/0306007].

[31] B. Aubert *et al.* [BABAR Collaboration], Phys. Rev. Lett. **91**, 171802 (2003) [arXiv:hep-ex/0307026]; B. Aubert *et al.* [BABAR Collaboration], arXiv:hep-ex/0404029.

[32] K.-F. Chen *et al.* [BELLE Collaboration], Phys. Rev. Lett. **91**, 201801 (2003) [arXiv:hep-ex/0307014].

[33] J. Smith [BABAR Collaboration], talk at Rencontres de Moriond QCD04, March 2004 [arXiv:hep-ex/0406063]; A. Gritsan [BABAR Collaboration], LBNL seminar, April 2004 [http://costard.lbl.gov/∼gritsan/RPM/BABAR-COLL-0028.pdf].

[34] A. L. Kagan, talks at Super B Factory Workshop, Honolulu, January 2004; Les Rencontres de Physique de la Valle d'Aoste, February 2004.

[35] C. W. Bauer, D. Pirjol, I. Z. Rothstein and I. W. Stewart, arXiv:hep-ph/0401188 v2.

[36] S. Mantry, D. Pirjol and I. W. Stewart, Phys. Rev. D **68**, 114009 (2003) [arXiv:hep-ph/0306254].

[37] M. Beneke, eConf **C0304052** (2003) F0001 [arXiv:hep-ph/0308040].

[38] M. Ciuchini, E. Franco, G. Martinelli, and L. Silvestrini, Nucl. Phys. B **501**, 271 (1997).

[39] P. Colangelo, F. De Fazio, and T. N. Pham, arXiv:hep-ph/0406162.

[40] V. Barger, C. W. Chiang, P. Langacker and H. S. Lee, Phys. Lett. B **580**, 186 (2004) [arXiv:hep-ph/0310073].